1	INITIAL RELEASE	JACK WU	2010/12/29
2	NEW FORM	JACK WU	2020/12/28
3			

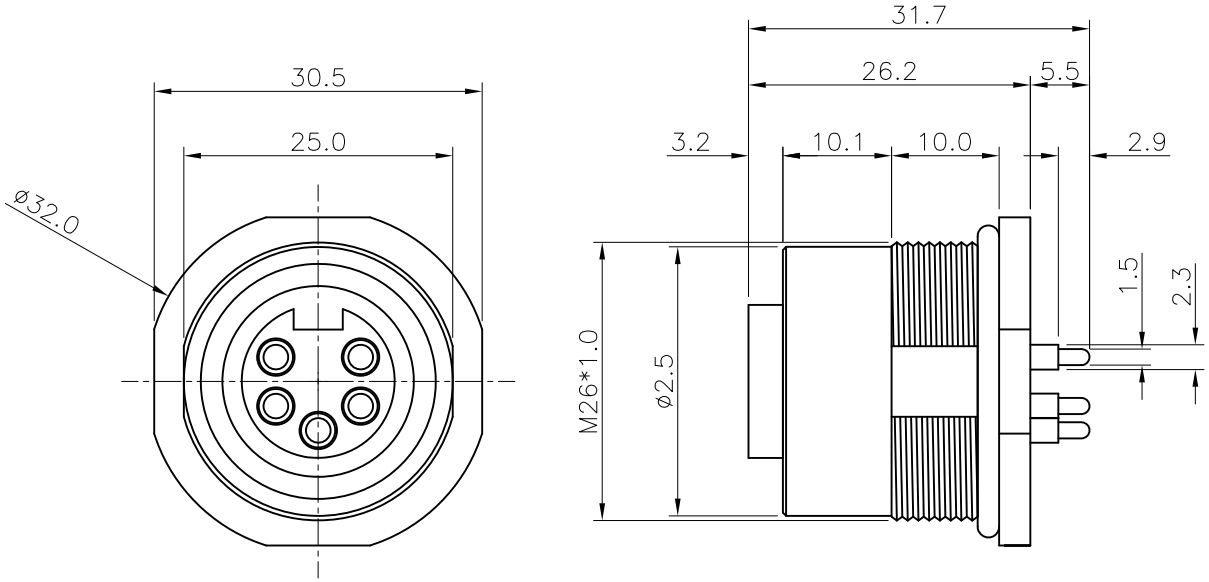

SPECIFICATION:

1. Current Rating: 20A
2. Voltage Rating: 250V
3. Water proof: IPX7
4. Operation Temperature: -20°C TO 85°C

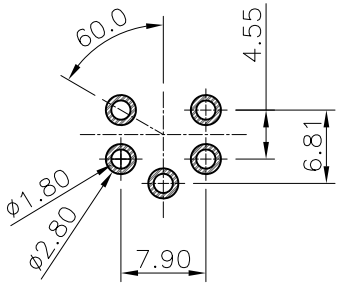

RECOMMEND
P.C.B LAYOUT

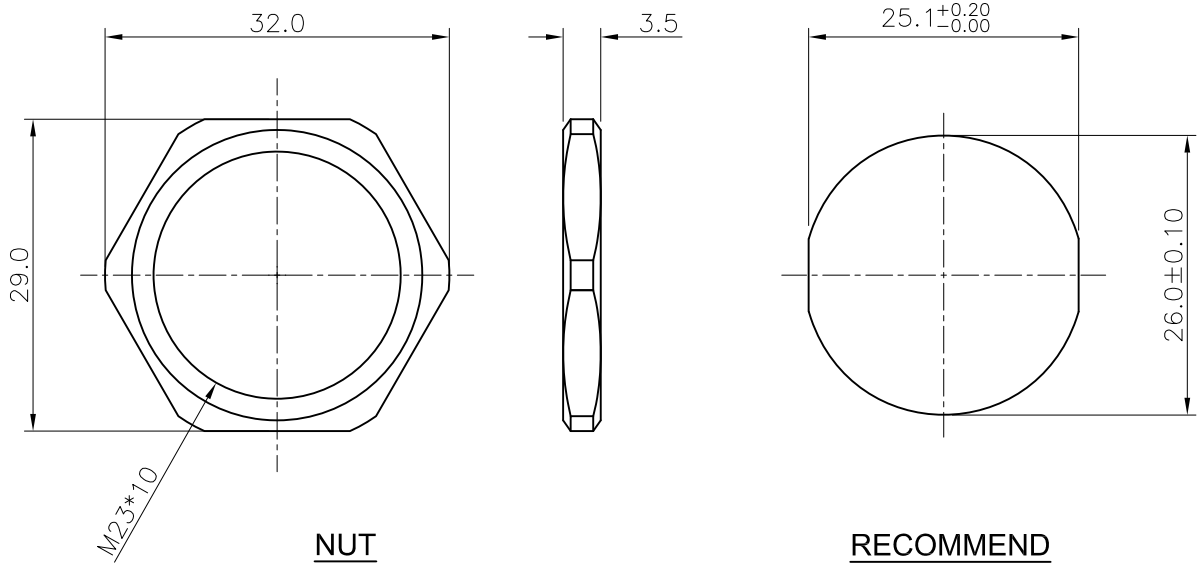

NUT

RECOMMEND
PANEL CUT-OUT

NO.	PART NAME	DESCRIPITION
7.	NUT	Aluminum, Nickel Plated
6.	O-RING C	NBR, Black
5.	O-RING B	NBR, Black
4.	O-RING A	NBR, Black
3.	SHELL	Aluminum, Nickel Plated
2.	CONTACT	Brass, 30u" Gold Plated over Nickel
1.	HOUSING	PBT UL94 V-0, Yellow

DIMESIONS : mm	TOLERANCES UNLESS OTHERWISE SPECIFIED : X. ± 0.30, X.X ± 0.20, X.XX ± 0.10, ANGLES ± 3°	Chunxin Technology
SCALE 1 : 1	DWN 20101229 JACK WU	NAME M23 Panel Type Socket 5PIn, Front Fastened Straight DIP Pin
SHEET 1/1	CHK 20101229 PETER WANG	
SIZE A4	APVD 20101229 SIMON LI	PRODUCT No. CX2-23F045-71
CUSTOMER DRAWING		DRAWING No. WP-M23S02