1	INITIAL RELEASE	JACK WU	2015/01/14
2	NEW FORM	JACK WU	2020/08/18
3			

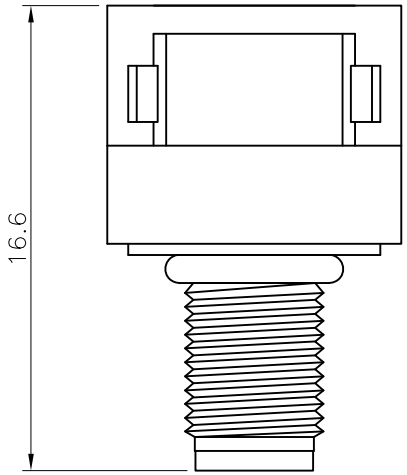

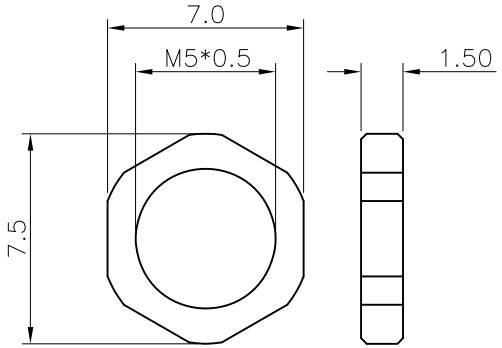

NUT

SPECIFICATION:

1. Current Rating: 1A
2. Voltage Rating: 60V
3. Water proof: IPX7
4. Operation Temperature: -20°C TO 85°C

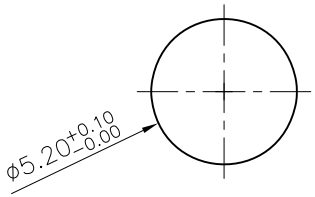

RECOMMEND
PANEL CUT-OUT

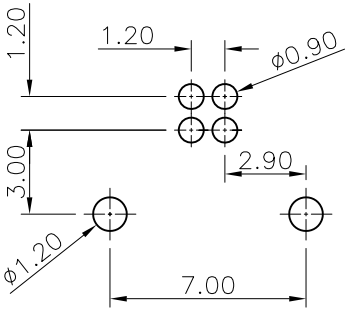

RECOMMEND
P.C.B LAYOUT

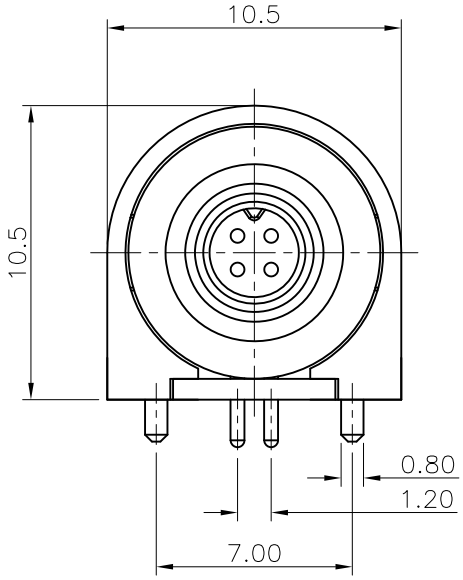

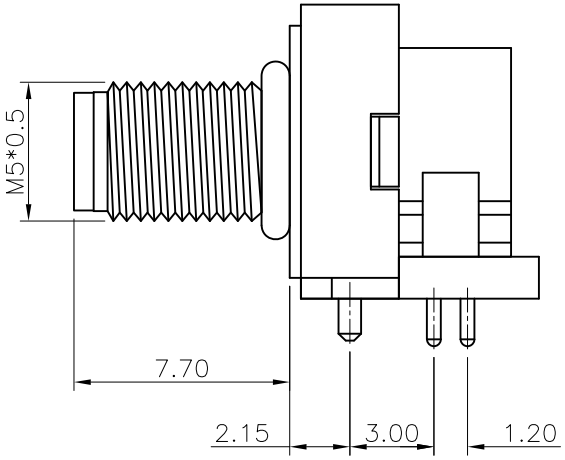

NOTE :

CX2-5M022-71	CX2-5M023-71	CX2-5M024-71
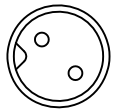	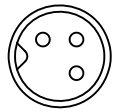	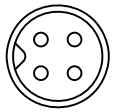

NO.	PART NAME	DESCRIPITION
6.	NUT	Brass, Nickel Plated
5.	O-RING	NBR
4.	CONTACT	Brass, Gold Plated over Nickel
3.	DOWN HOUSING	PBT UL94 V-0, Black
2.	BACK HOUSING	PBT UL94 V-0, Black
1.	HOUSING	PBT UL94 V-0, Black

DIMESIONS : mm	TOLERANCES UNLESS OTHERWISE SPECIFIED : X. ± 0.30, X.X ± 0.20, X.XX ± 0.10, ANGLES ± 3°	Chunxin Technology
SCALE 1 : 1	DWN 20150114 JACK WU	NAME M5 Panel Type Plug Front Fastened, R/A DIP Pin
SHEET 1/1	CHK 20150114 PETER WANG	
SIZE A4	APVD 20150114 SIMON LI	PRODUCT No. SEE NOTE
CUSTOMER DRAWING		DRAWING No. WP-M5P02