1	INITIAL RELEASE	JACK WU	2011/10/27
2	NEW FORM	JACK WU	2020/12/28
3			

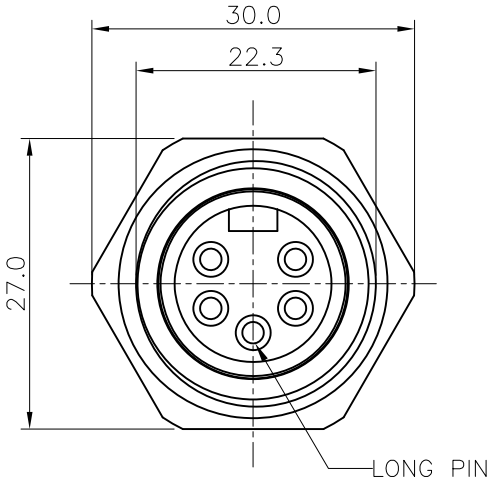

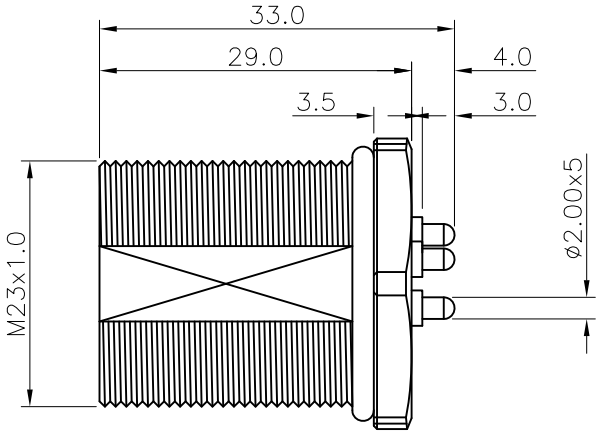

SPECIFICATION:

1. Current Rating: 20A
2. Voltage Rating: 250V
3. Water proof: IPX7
4. Operation Temperature: -40°C TO 85°C

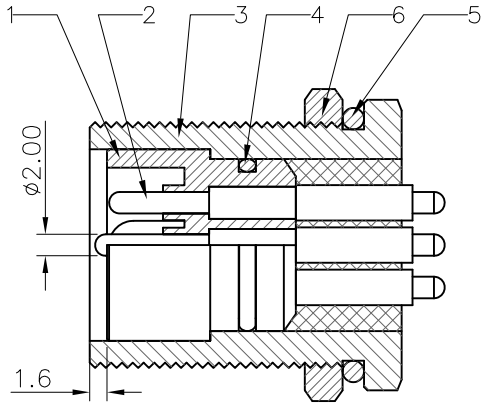

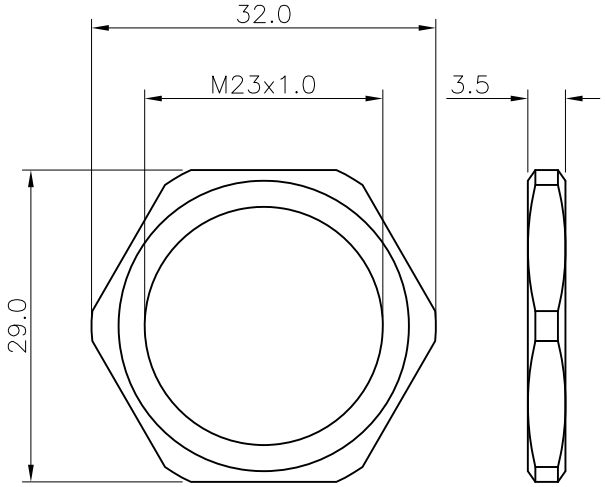

NUT

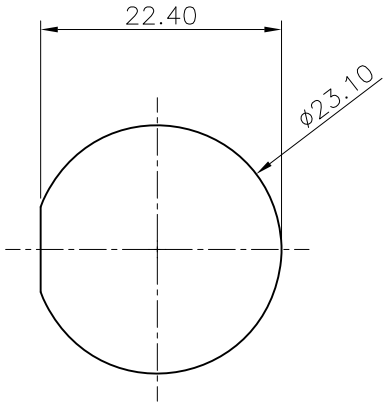

RECOMMEND
PANEL CUT-OUT

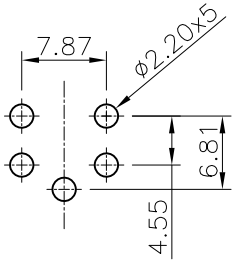

RECOMMEND
P.C.B LAYOUT

NO.	PART NAME	DESCRIPITION
6.	NUT	Brass, Nickel Plated
5.	O-RING B	Silicone, Brown
4.	O-RING A	EPDM, Black
3.	SHELL	Brass, Nickel Plated
2.	CONTACT	Brass, 30u" Gold Plated over Nickel
1.	HOUSING	PBT UL94 V-0, Yellow

DIMESIONS : mm	TOLERANCES UNLESS OTHERWISE SPECIFIED : X. ± 0.30, X.X ± 0.20, X.XX ± 0.10, ANGLES ± 3°	Chunxin Technology
SCALE 1 : 1	DWN 20111027 JACK WU	NAME M23 Panel Type Plug 5PIn, Front Fastened Straight DIP Pin
SHEET 1/1	CHK 20111027 PETER WANG	
SIZE A4	APVD 20111027 SIMON LI	PRODUCT No. CX2-23M045-71
CUSTOMER DRAWING		DRAWING No. WP-M23P02